# GOLDSTRIKE™ 1: COINTERRA'S FIRST GENERATION CRYPTO-CURRENCY PROCESSOR FOR BITCOIN MINING MACHINES

Javed Barkatullah, Ph.D., MBA
Timo Hanke, Ph.D.
Ravi Iyengar
Ricky Lewelling
Jim O'Connor

# BITCOIN MINING WORK

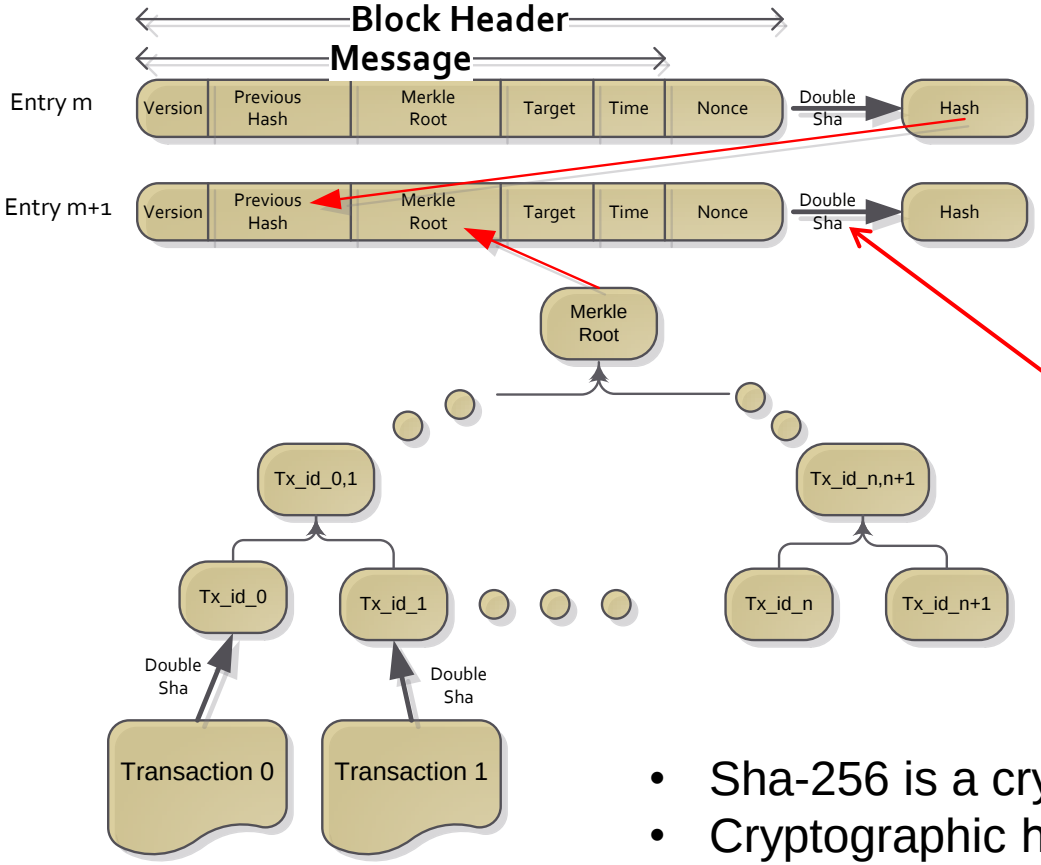


For a message ***m*** find a nonce ***n*** such that the 256-bit result

**Sha-256 (Sha-256 (*m* || *n*) )**

has a specified number of leading zero bits ("target")

- Sha-256 is a cryptographic hash function
- Cryptographic hash functions are "one way" functions
- This search problem is best solved by trial-and-error

# HISTORY OF BITCOIN MINING HARDWARE

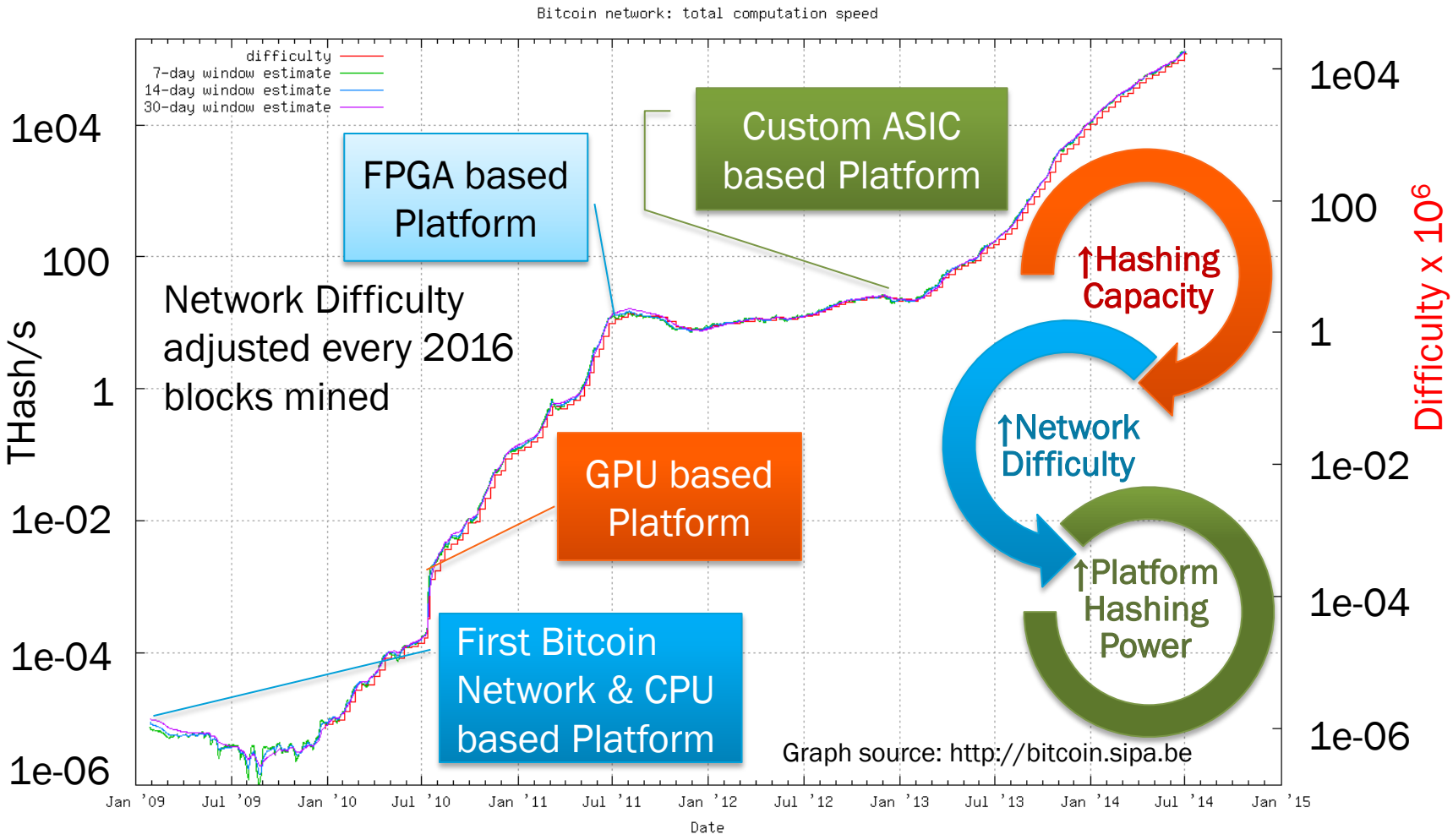


COINTERRA™

# GOLDSTRIKE™ 1 DEVELOPMENT TIMELINE

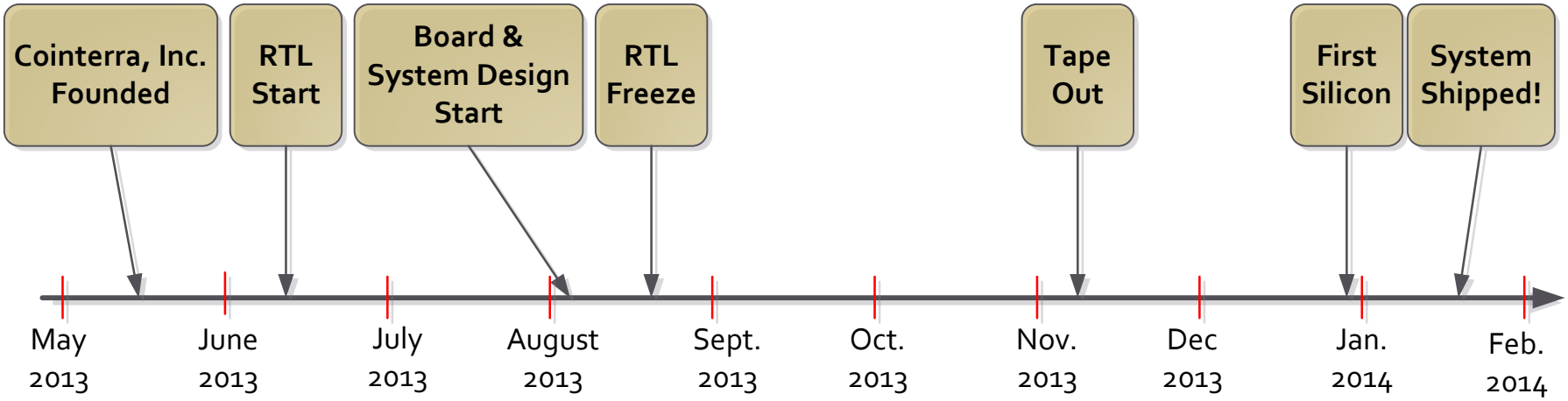


- **4 months from RTL start to tape out!**
- **49 days from tape out to first silicon**
- **Packaged silicon arrived on Dec. 28, 2013**
- **First system shipped to customer around mid January, 2014**

COINTERRA™

# GOLDSTRIKE™ 1 ARCHITECTURE

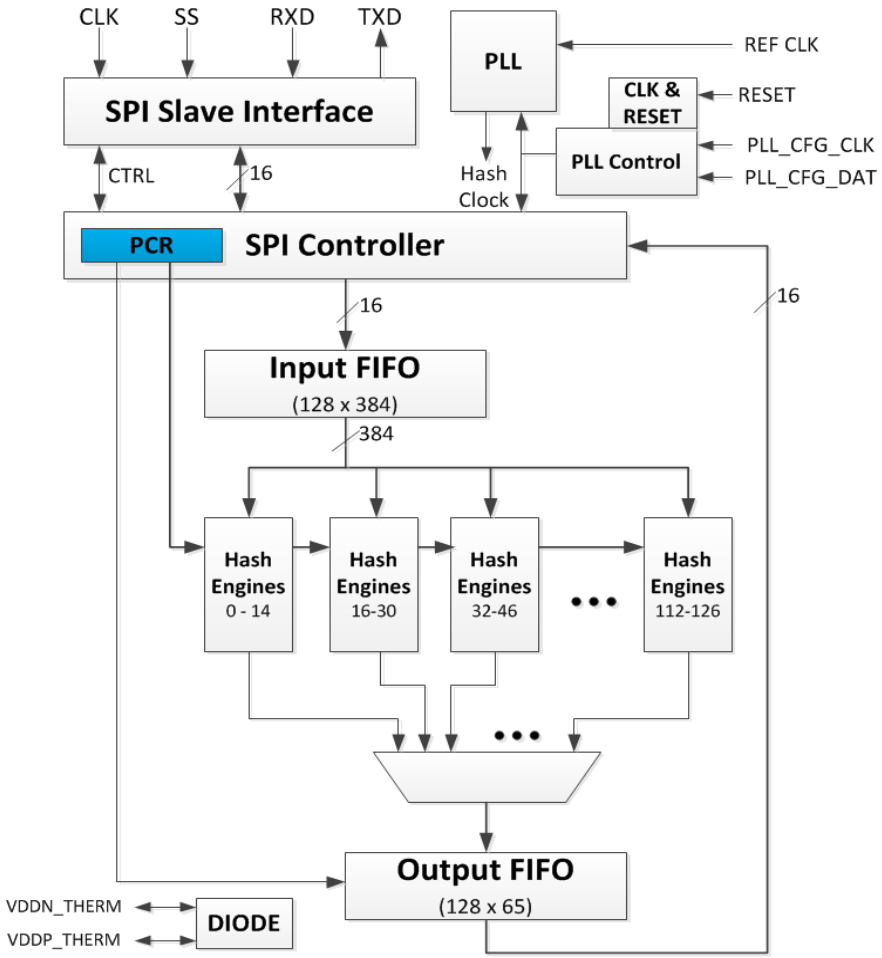


- **Motorola compatible 4-pin SPI Port**
- **PLL with simple bit-bang interface**
- **120 Hash Engines arranged into 16 super-pipes**
- **128 deep Input Work FIFO**
- **128 deep Output Status FIFO**
- **384-bit Pipe Control Register (PCR) to enable/disable individual hash engine**
- **Low I/O bandwidth requirement**
  - New work (384 bits) every $2^{32}$ clock cycles per engine

# HASH ENGINE

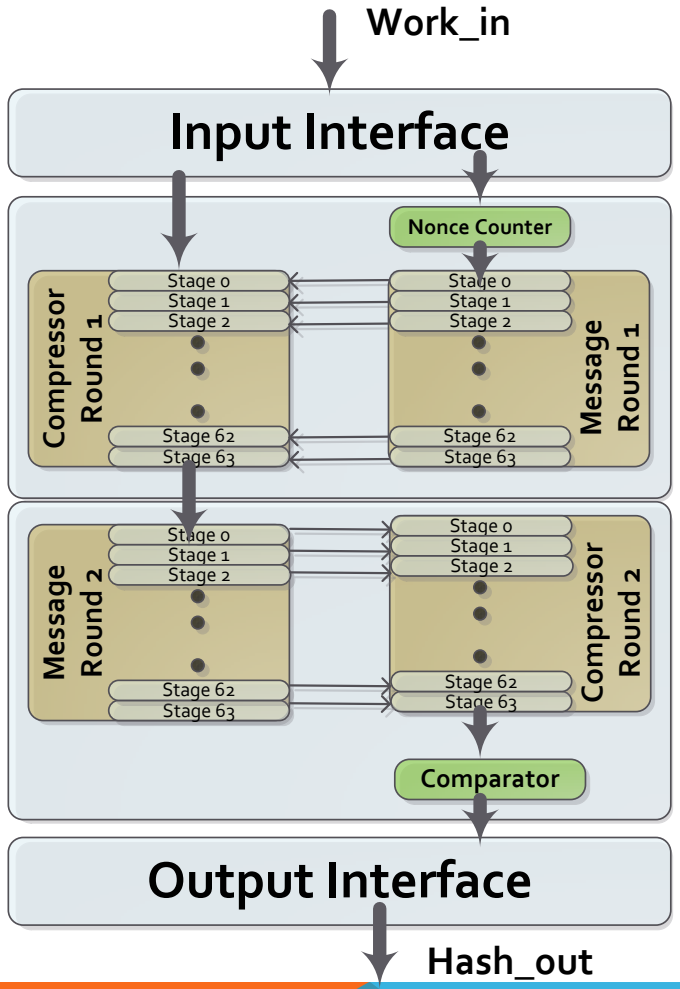


- Two rounds of SHA-256 processing
- Searches for a result in $2^{32}$ nonce range
- Each round consists of 64 iterations
- Fully unrolled iterations
- Two parallel but connected pipelines – message & compressor
- Generates a result out only if target criteria met

# COMPRESSOR STAGE OF SHA-256 PIPELINE

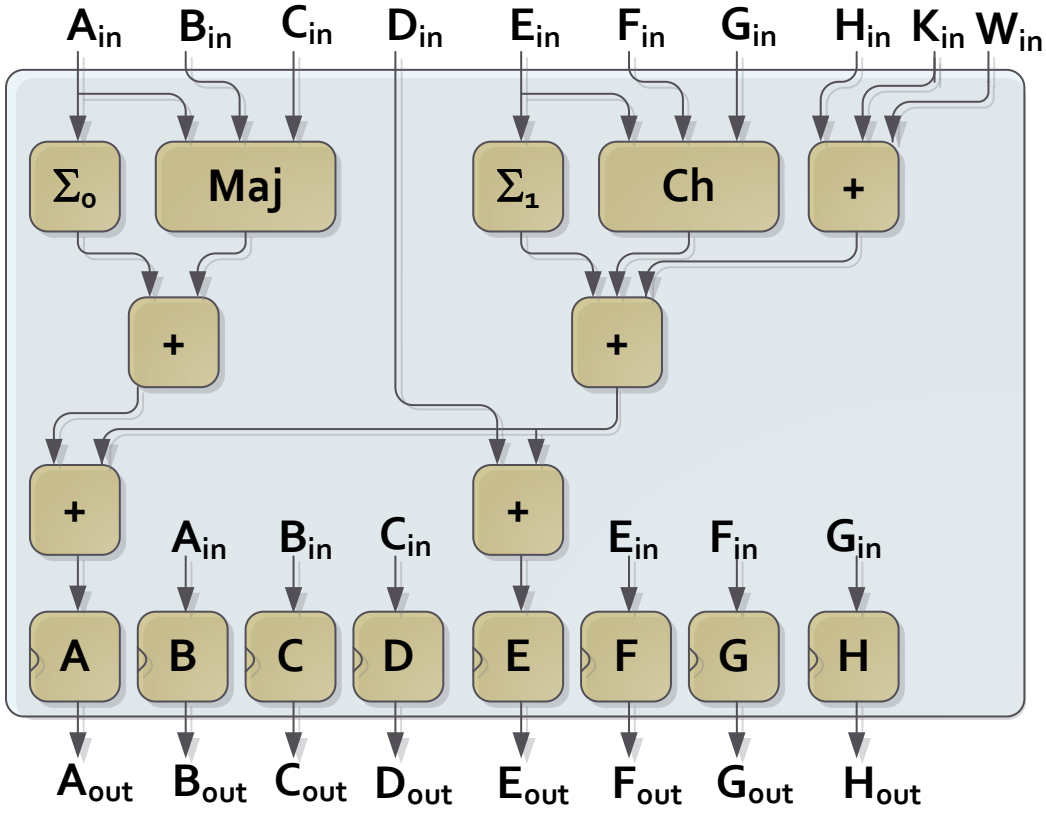


$$\Sigma_0(A) = (A \ggg s_1) \oplus (A \ggg s_2) \oplus (A \ggg s_3)$$

$$\Sigma_1(E) = (E \ggg s_4) \oplus (E \ggg s_5) \oplus (E \ggg s_6)$$

$$Ch(E,F,G) = (E \wedge F) \oplus (\sim E \wedge G)$$

$$Maj(A,B,C) = (A \wedge B) \oplus (B \wedge C) \oplus (C \wedge A)$$

All registers are 32-bits wide

COINTERRA™

# MESSAGE STAGE SHA-256 PIPELINE

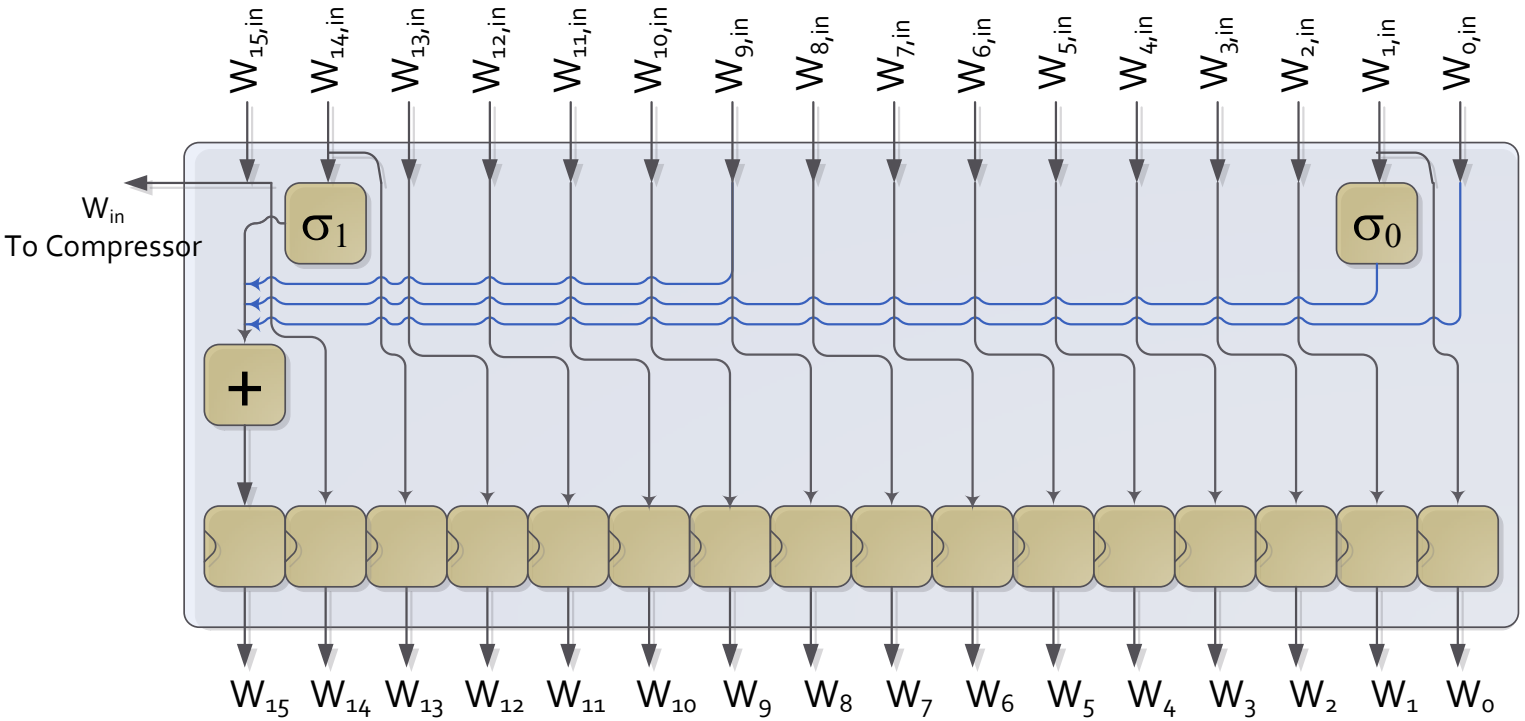


- 512 bits message word divided in to 16 words, 32-bit wide ($W_0$ to $W_{15}$)
- $\sigma_0(W_{1,in}) = (W_{1,in} \ggg s_7) \oplus (W_{1,in} \ggg s_8) \oplus (W_{1,in} \ggg s_9)$
- $\sigma_1(W_{14,in}) = (W_{14,in} \ggg s_{10}) \oplus (W_{14,in} \ggg s_{11}) \oplus (W_{14,in} \ggg s_{12})$

# DIE MICROGRAPH

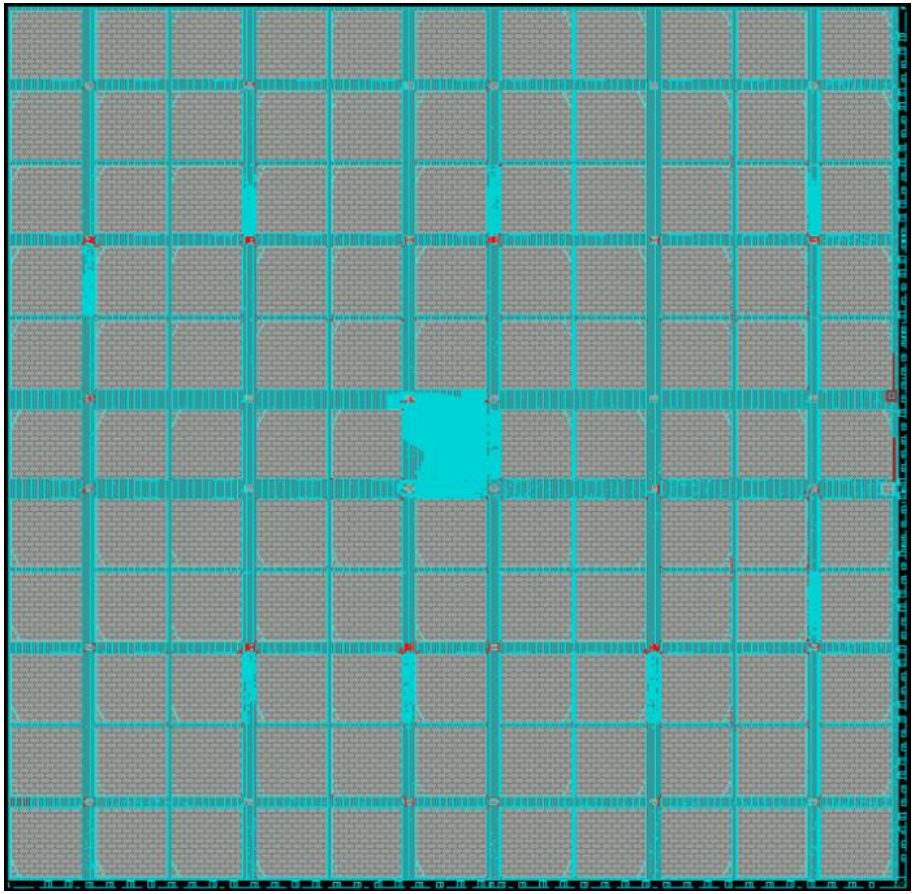

- Global Foundries HKMG 28nm HPP process
- 9 metal layers
- 120 hash engines in 11x11 array (grey boxes)
- Top level logic block in the center

COINTERRA™

# GOLDSTRIKE™-1 (GS1) PACKAGE

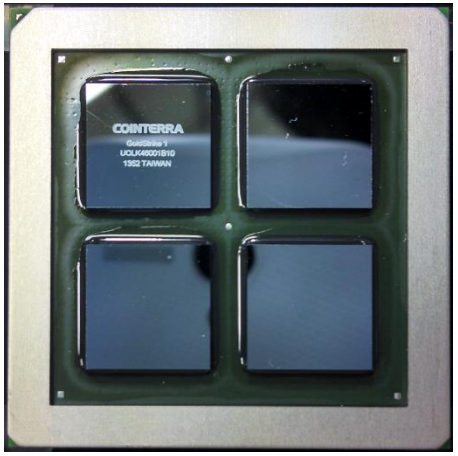


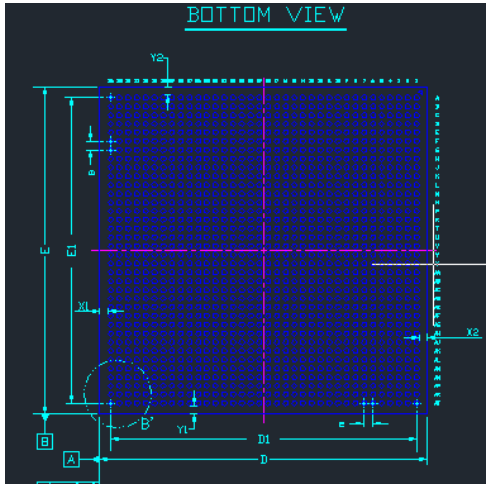


- 37.5 x 37.5 mm FCBGA package
- 4 bare dies per package
- 1296 pins
- > 500 GH/s @ 1.05GHz & 0.7v

COINTERRA™

# HEAT DISSIPATION CHALLENGE

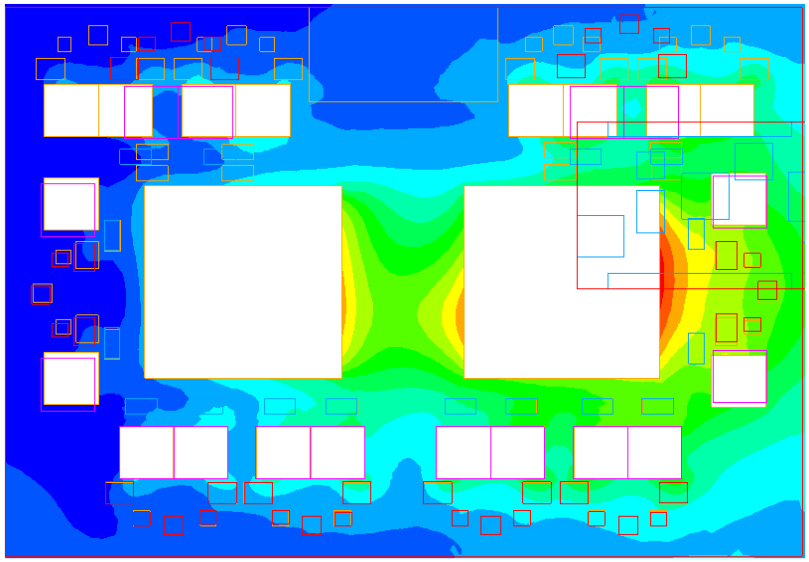

**Air Temps on Plane 3mm above PCB Top**

- **Cooling options examined:**
  - Heat sink + Airflow ← Common in CPU applications
  - Liquid Cooling ← Popular among over-clockers
  - Immersion ← Efficient for data centers
- **Liquid cooling with direct attach cooling head selected**
  - Enable a common platform for both home & data center customers

COINTERRA™

# TERRAMINER APPLIANCE

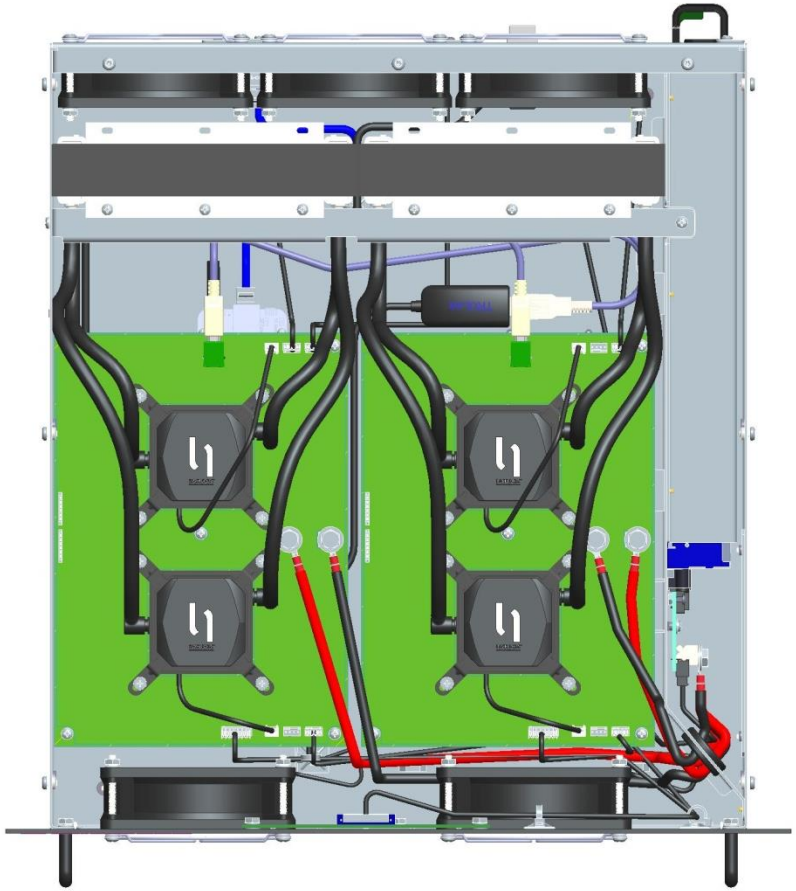

**Up to 2TH/s hash rate per appliance**

- Dual PCB with 4 GS1 packages total
- Power budget to meet household outlet capacity

**Layout - 4U chassis Design**

- Driven by cooling requirements
  - Radiator cross-section
  - Fan Size
- Similar design for TerraMiner IV data center and home models
- Push pull airflow design for maximum performance
- Fans chosen for balance between cost, performance & audible noise
- Dual 1U power supplies for minimal volume impact

COINTERRA™

# TERRAMINER APPLIANCE IMAGES

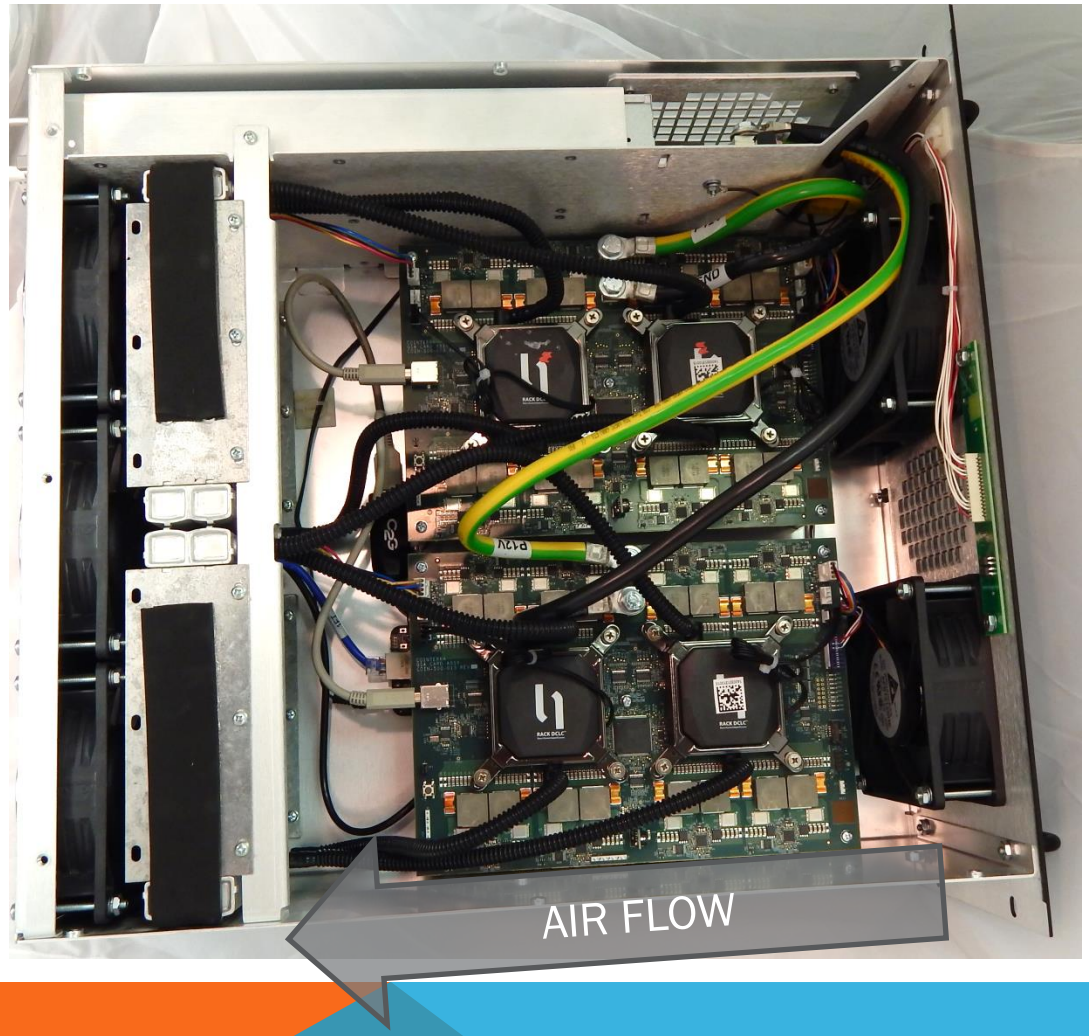



Front View

Back View

COINTERRA™

# TERRAMINER™ IN DATACENTER

COINTERRA™

# ASIC DESIGN CHALLENGES & CHOICES

**Challenges:**

- **High power density and high node toggle rates**
  - Power delivery
  - Heat dissipation
  - IR drop and di/dt noise
- **Very high sequential cell count**
- **Reduce die area and power consumption**
- **Very short (4-month) schedule from RTL start to tape out**
- **Very small design team**

**Choices:**

- **Optimize common core blocks**
- **Maximize design repeat & reuse**
- **Utilize highly experienced design team**

COINTERRA™

# CONCLUDING REMARKS

- Continued demand for higher performance and lower power appliance
- Maintain Cointerra's leadership position in Bitcoin mining industry
    - New designs with increased power efficiency and performance

COINTERRA™