Pipeline Depth Tradeoffs and the Intel® Pentium® 4 Processor

Doug Carmean
Principal Architect
Intel Architecture Group

August 21, 2001

Copyright © 2001 Intel Corporation.

Agenda

- Review
- Pipeline Depth
- Execution Trace Cache
- L1 Data Cache
- Summary

Copyright © 2001 Intel Corporation.

Information in this document is provided in connection with Intel® products. No license, express or implied, by estoppel or otherwise, to any intellectual property rights is granted by this document. Except as provided in Intel's Terms and Conditions of Sale for such products, Intel assumes no liability whatsoever, and Intel disclaims any express or implied warranty, relating to sale and/or use of Intel® products including liability or warranties relating to fitness for a particular purpose, merchantability, or infringement of any patent, copyright or other intellectual property right. Intel products are not intended for use in medical, life saving, or life sustaining applications.

Intel may make changes to specifications and product descriptions at any time, without notice.

This document contains information on products in the design phase of development. Do not finalize a design with this information. Revised information will be published when the product is available. Verify with your local sales office that you have the latest datasheet before finalizing a design.

Intel processors may contain design defects or errors known as errata, which may cause the product to deviate from published specifications. Current characterized errata are available on request.

Intel, Pentium, and the Intel logo are trademarks or registered trademarks of Intel Corporation or its subsidiaries in the United States and foreign countries.

Copyright © (2001) Intel Corporation.

Intel® Netburst™ Micro-architecture vs P6

Basic P6 Pipeline

Intro at 733MHz .18µ

1	2	3	4	5	6	7			10
Fetch	Fetch	Decode	Decode	Decode	Rename	ROB Rd	Rdy/Sc		Exec

Basic Pentium® 4 Processor Pipeline

Intro at

1	2	3	4	5	6	7	8	9	10	11	12	13	14	
TC Nxt IP		TC Fetch		Drive	Alloc	Rename		Que	Sch	Sch	Sch	Disp	Disp	

Hyper pipelined Technology enables industry leading performance and clock rate

Copyright © 2001 Intel Corporation.

intel®

Hyper Pipelined Technology

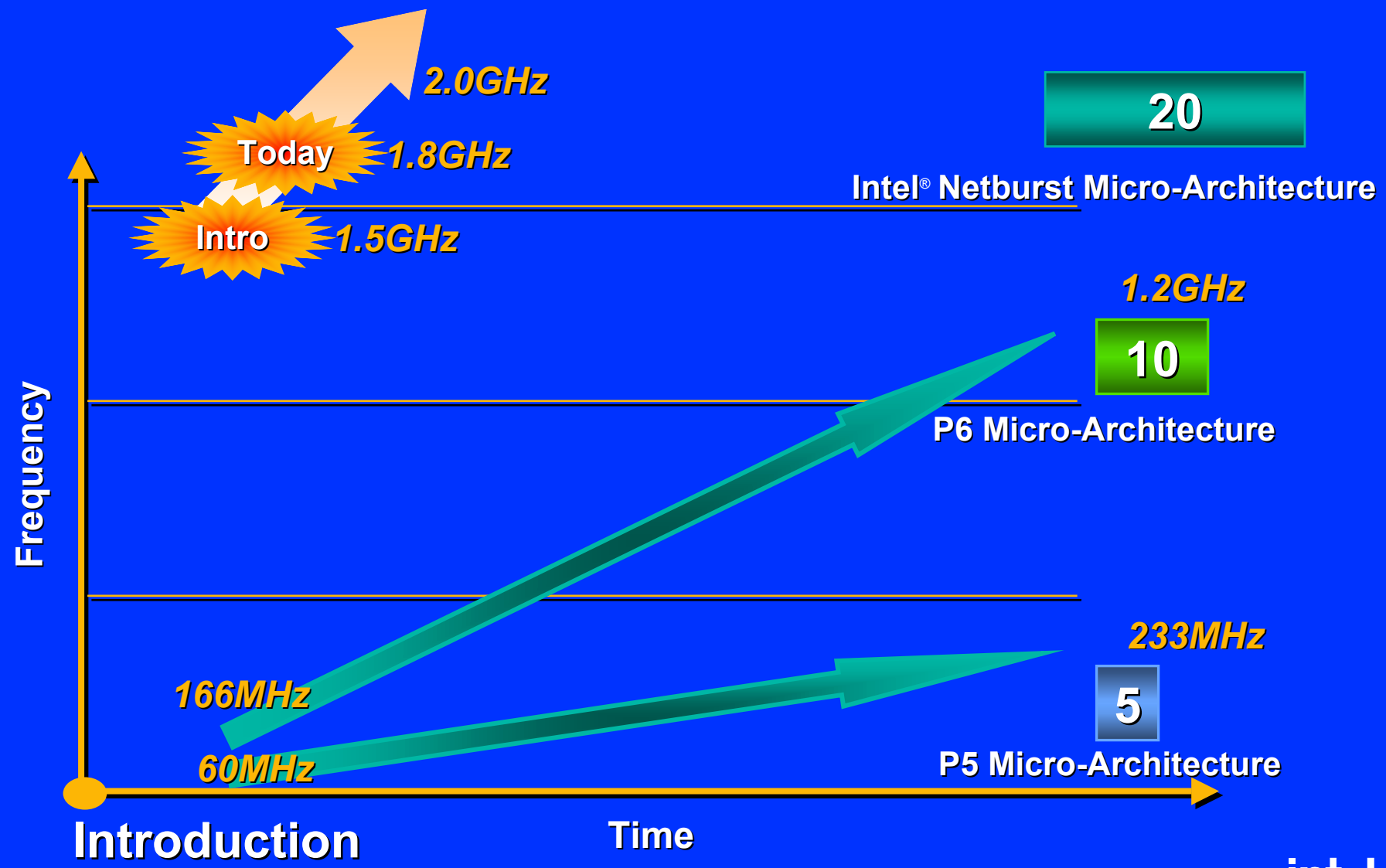

Copyright © 2001 Intel Corporation.

Deeper Pipelines are Better

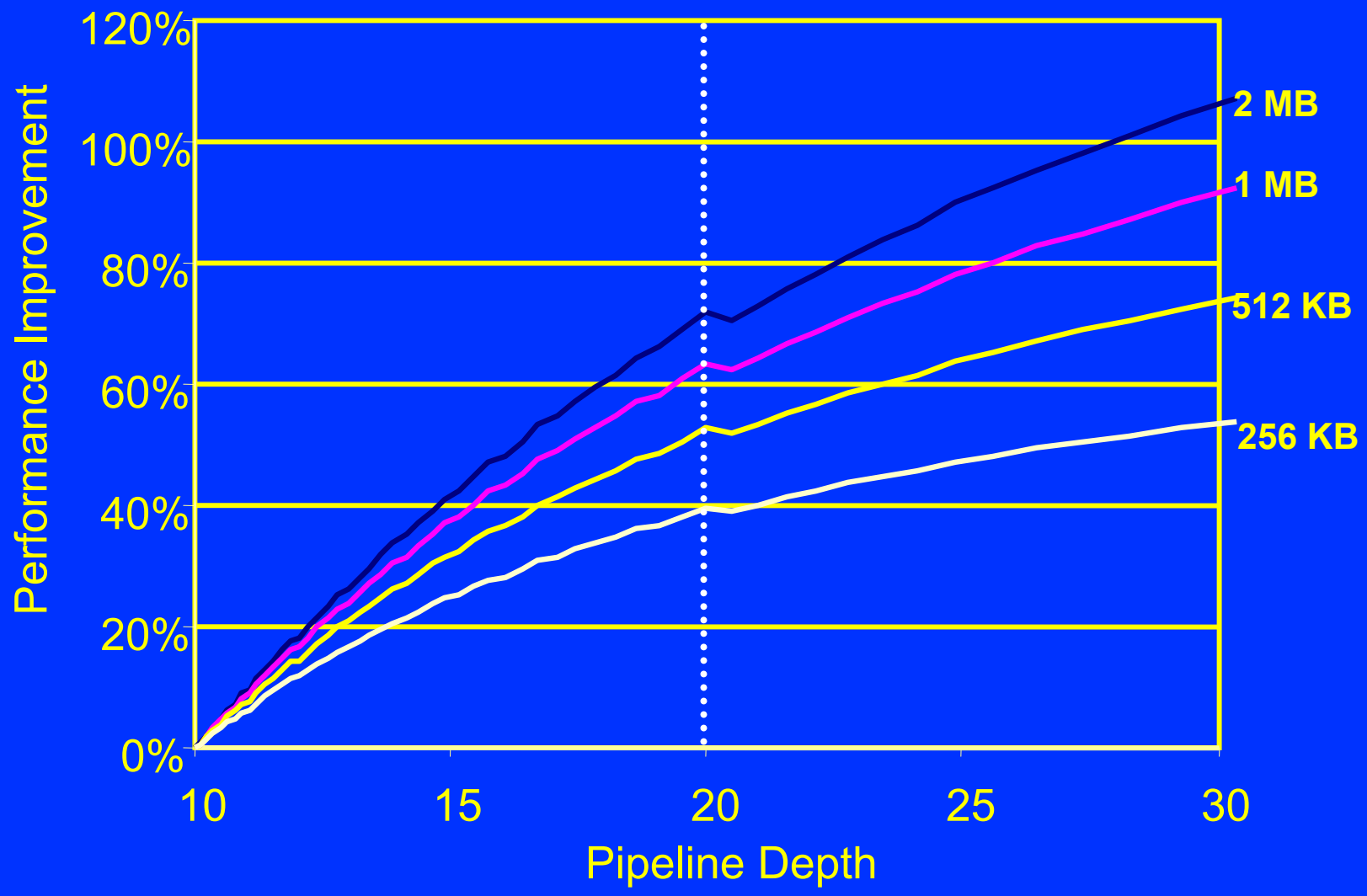

Source: Average of 2000 application segments from performance simulations

Copyright © 2001 Intel Corporation.

Why not deeper pipelines?

- Increases complexity
  - Harder to balance
  - More challenges to architect around
  - More algorithms
  - Greater validation effort
  - Need to pipeline the wires

Overall Engineering Effort Increases Quickly as Pipeline depth increases

Copyright © 2001 Intel Corporation.

Performance

- High
- I

High Bandwidth Front End

Copyright © 2001 Intel Corporation.

Higher Frequency increases requirements of front end

- Branch prediction is more important
  - So we improved it
- Need greater uop bandwidth
  - Branches constantly change the flow
  - Need to decode more instructions in parallel

Copyright © 2001 Intel Corporation.

Block Diagram

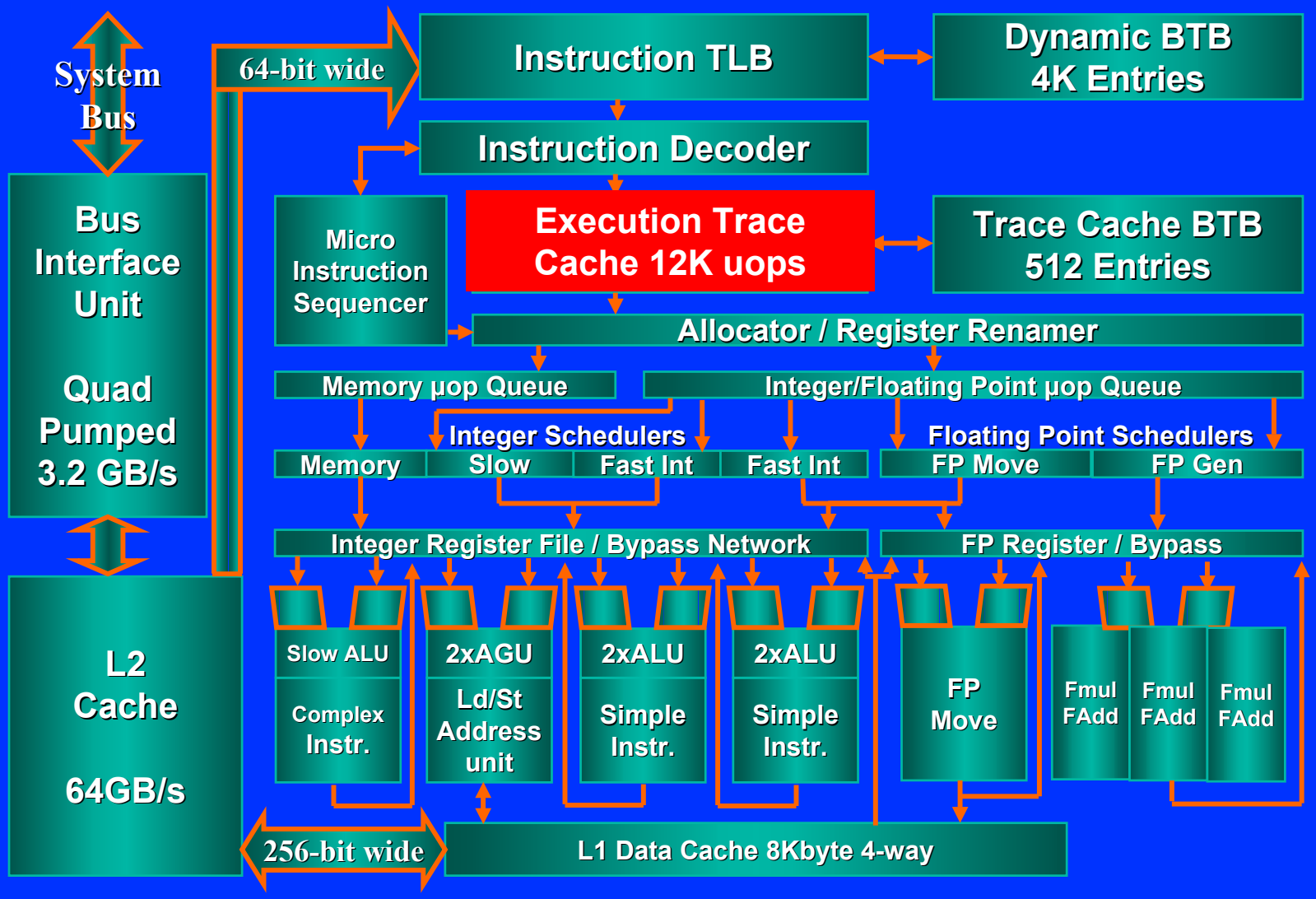

Copyright © 2001 Intel Corporation.

Execution Trace Cache

```
1 cmp
2 br -> T1
  ..
  ... (unused code)
T1:   3 sub
      4 br -> T2
        ..
        ... (unused code)
T2:     5 mov
        6 sub
        7 br -> T3
          ..
          ... (unused code)
T3:       8 add
          9 sub
         10 mul
         11 cmp
         12 br  -> T4
```

Trace Cache Delivery

1 cmp	2 br T1	3 T1: sub
4 br T2	5 mov	6 sub
7 br T3	8 T3:add	9 sub
10 mul	11 cmp	12 br T4

Copyright © 2001 Intel Corporation.

Execution Trace Cache

P6 Microarchitecture

1 cmp	2 br T1	
3 T1: sub	4 br T2	
5 mov	6 sub	7 br T3
8 T3:add	9 sub	10 mul
11 cmp	12 br T4	

BW = 1.5 uops/ns

Trace Cache Delivery

1 cmp	2 br T1	3 T1: sub
4 br T2	5 mov	6 sub
7 br T3	8 T3:add	9 sub
10 mul	11 cmp	12 br T4

BW = 6 uops/ns

Copyright © 2001 Intel Corporation.

Inside the Execution Trace Cache

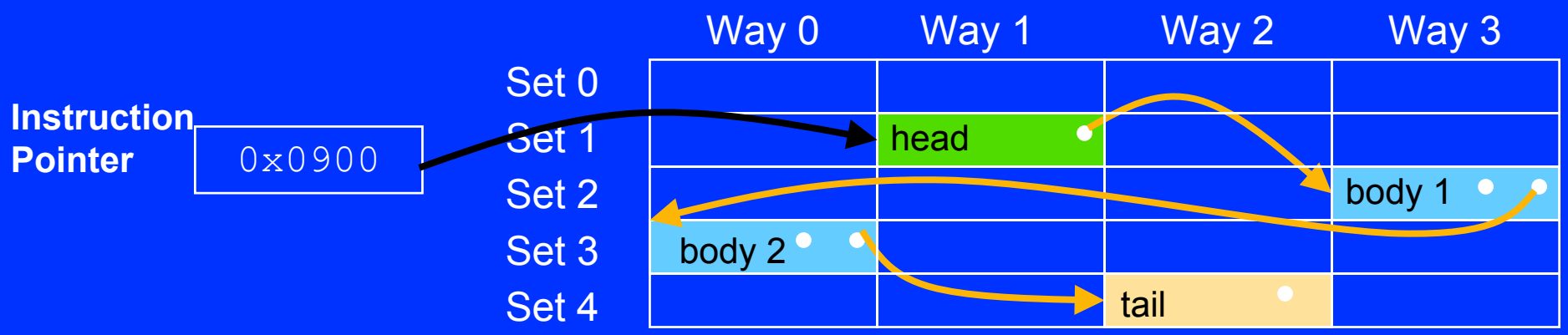

head	cmp,	br T1,	T1:sub,	br T2,	mov, sub
body 1	br T3,	T3:add,	sub,	mul,	cmp, br T4
body 2	T4:add,	sub,	mov,	add,	add, mov
tail	add,	sub,	mov,	add,	add, mov

Copyright © 2001 Intel Corporation.

Self Modifying Code

- Programs that modify the instruction stream that is being executed
- Very common in Java* code from JITs
- Requires hardware mechanisms to maintain consistency

*Other names and brands may be claimed as the property of others.

Copyright © 2001 Intel Corporation.

Self Modifying Code

- The hardware needs to handle two basic cases:
  - Stores that write to instructions in the Trace Cache
  - Instruction fetches that hit pending stores
    - Speculative
    - Committed

Copyright © 2001 Intel Corporation.

intel®

Case 1: Stores to cached instructions

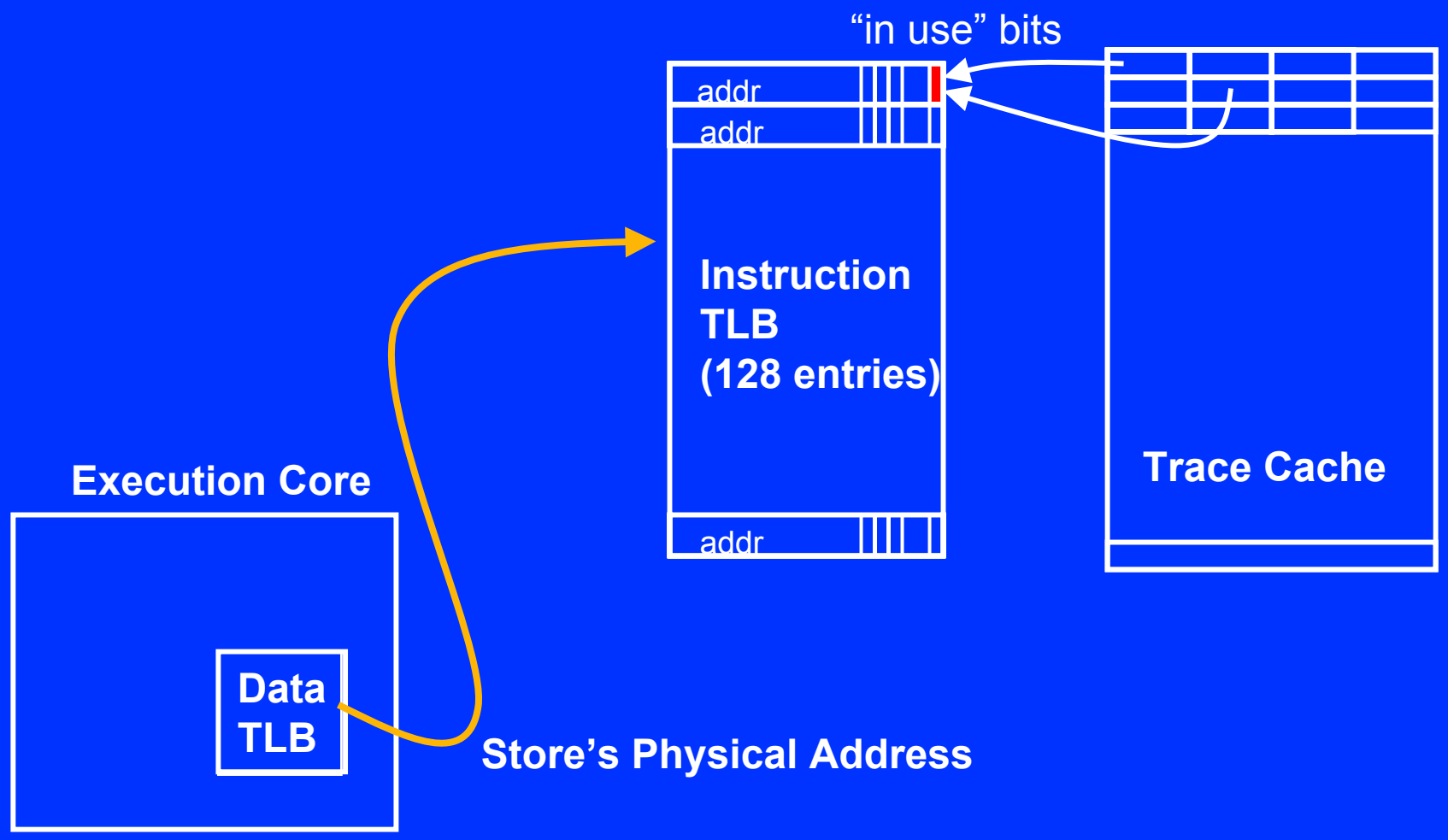

Copyright © 2001 Intel Corporation.

Case 2: Fetches to pending stores

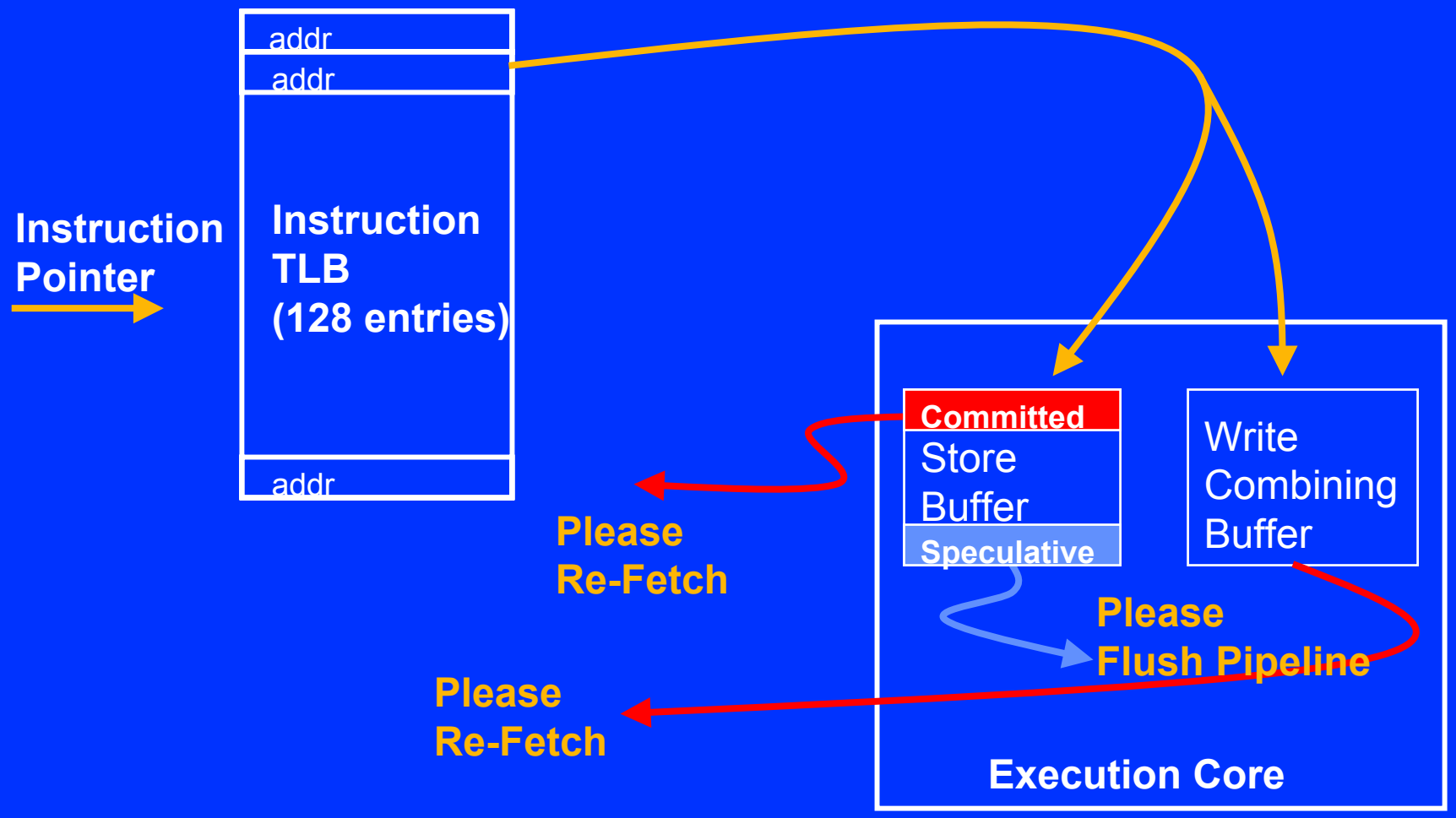

Copyright © 2001 Intel Corporation.

Execution Trace Cache

- Provides higher bandwidth for higher frequency core
- Reduces fetch latency
- Requires new fundamentally new algorithms

Copyright © 2001 Intel Corporation.

Performance

- High bandwidth front end
- Lo

Low Latency Core

Copyright © 2001 Intel Corporation.

L1 Data Cache

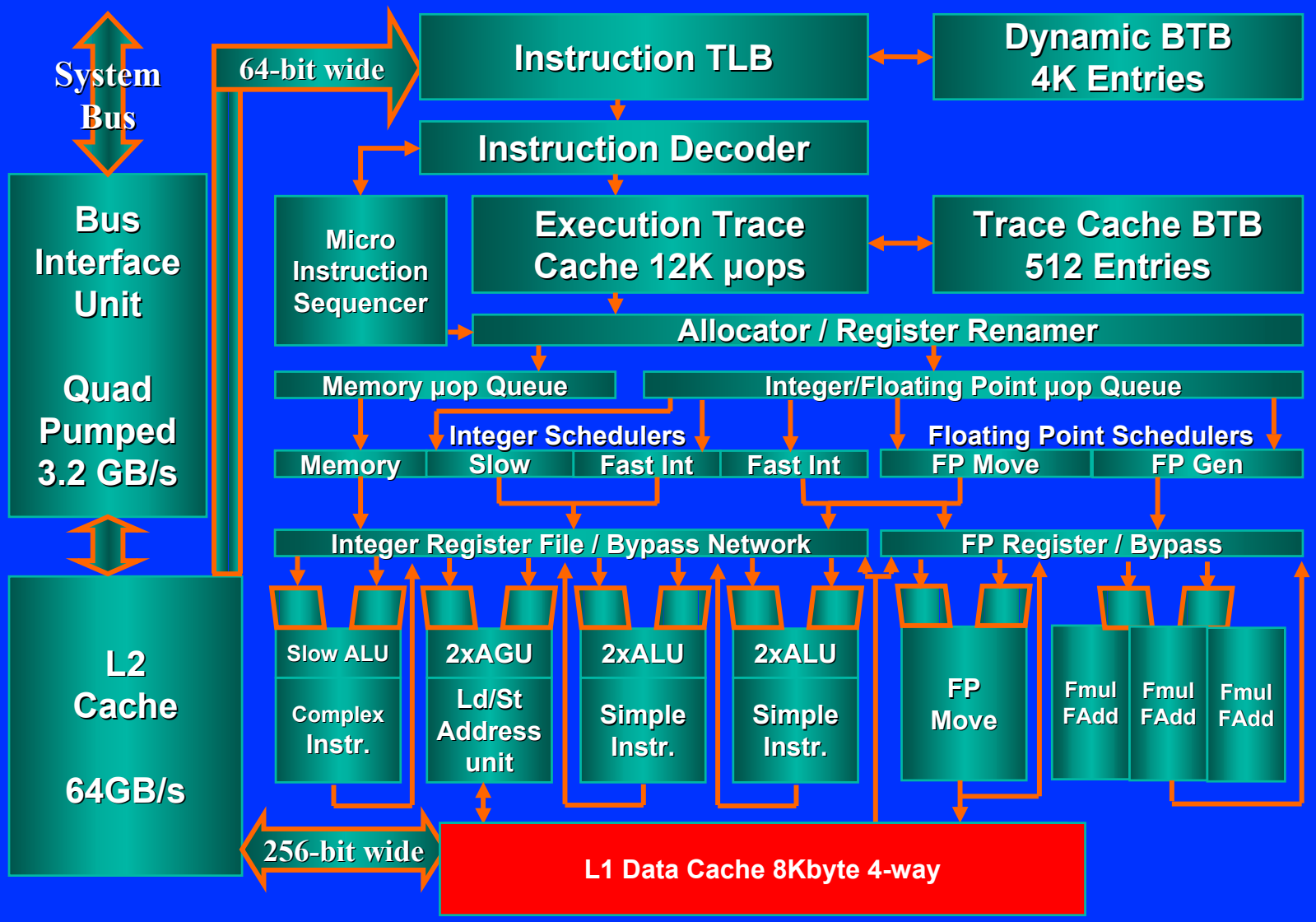

Copyright © 2001 Intel Corporation.

L1 Cache is 3x Faster

- P6:
  - 3 clocks @ 1GHz
- Pentium® 4 Processor :
  - 2 clocks @ 2GHz

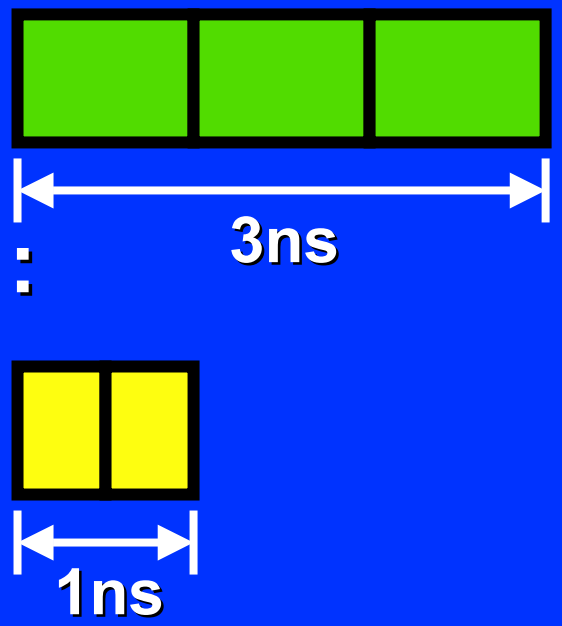

Lower Latency is Higher Performance

Copyright © 2001 Intel Corporation.

L1 Data Cache

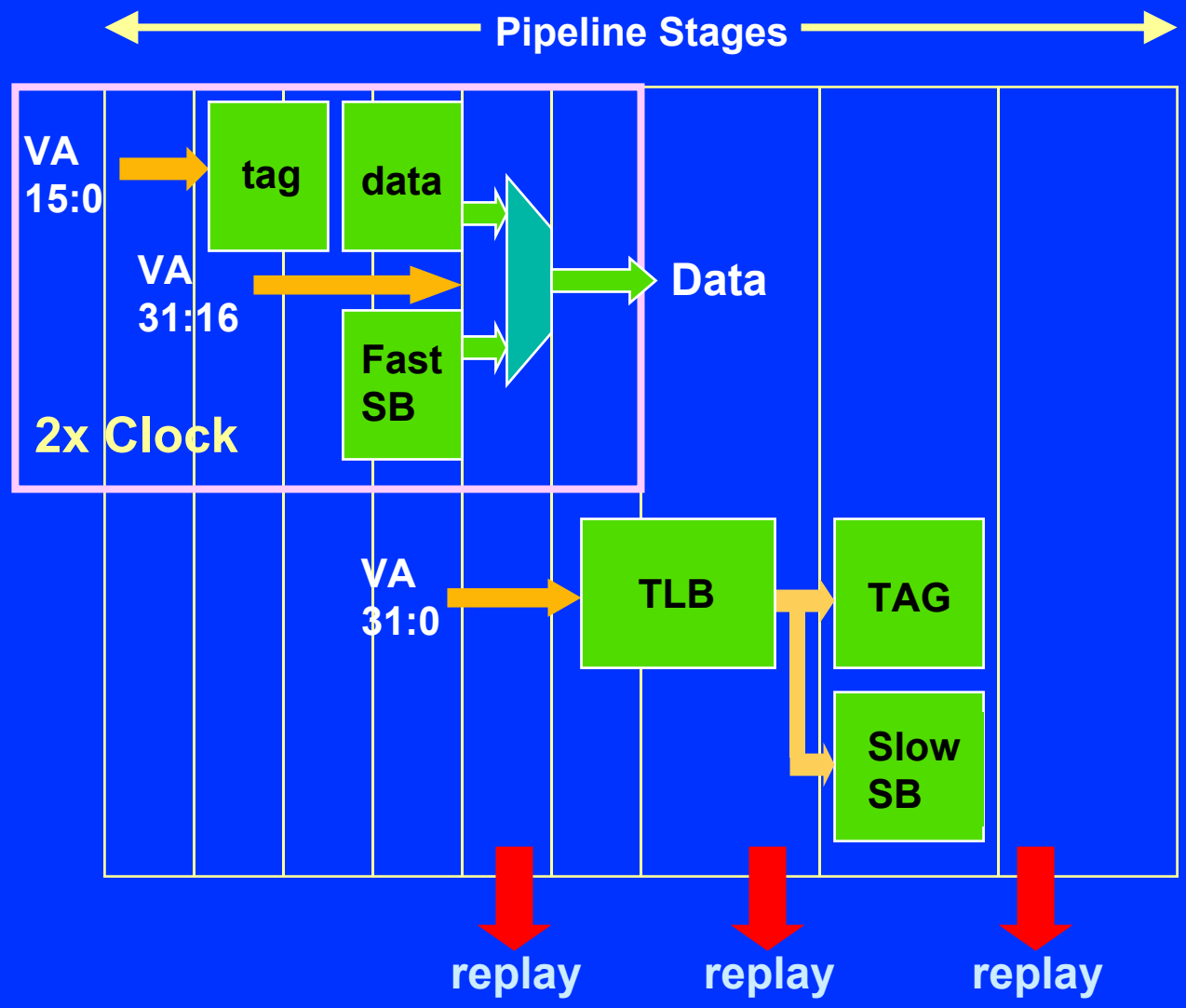

Copyright © 2001 Intel Corporation.

L1 Data Cache

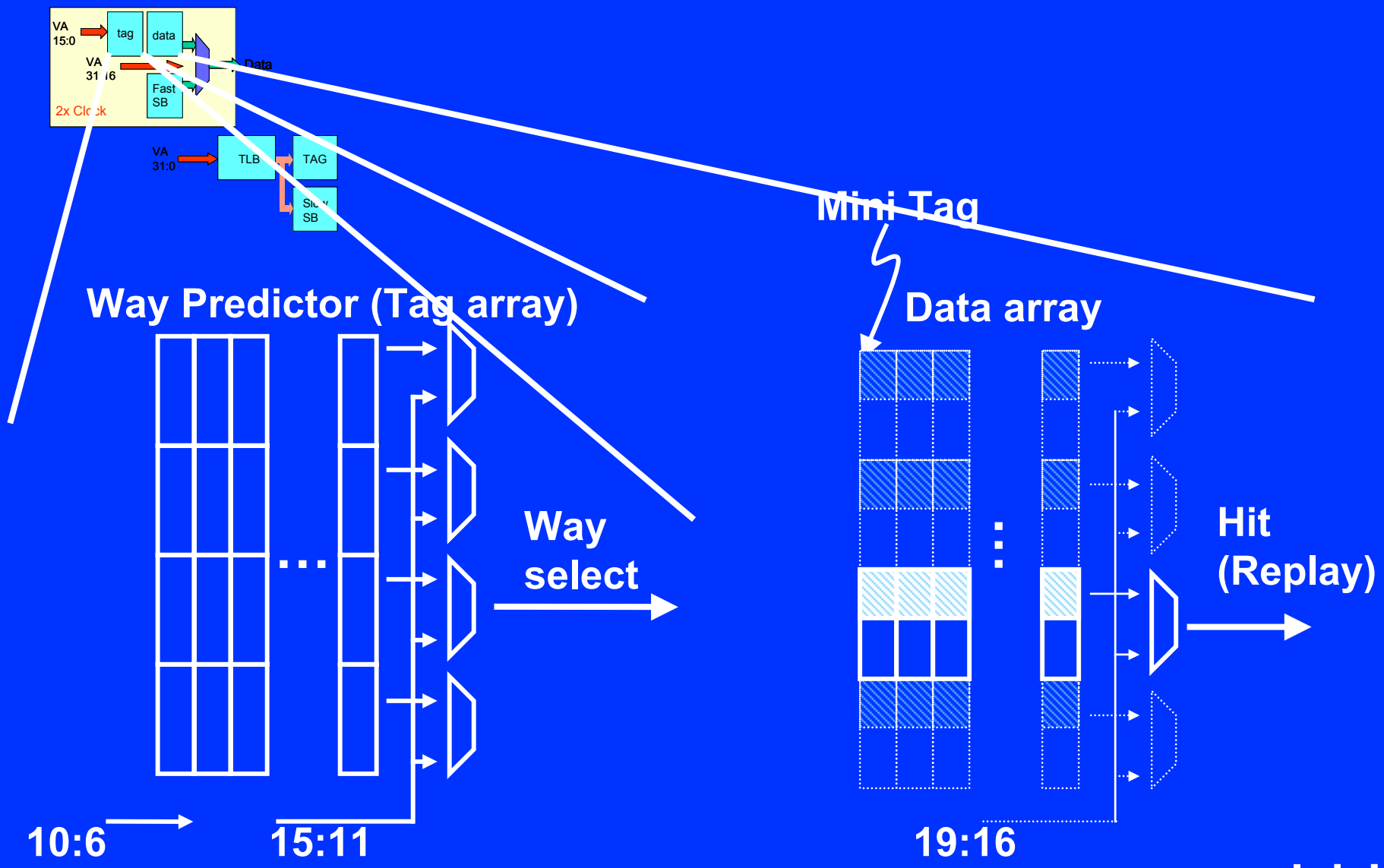

Copyright © 2001 Intel Corporation.

Performance

- High bandwidth front end
- Low latency core
- Low

Lower Memory Latency

Copyright © 2001 Intel Corporation.

Reducing Latency

- As frequency increases, it is important to improve the performance of the memory subsystem
- Data Prefetch Logic
  - Watches processor memory traffic
  - Looks for patterns
  - Initiates accesses

Copyright © 2001 Intel Corporation.

Data Prefetch Logic

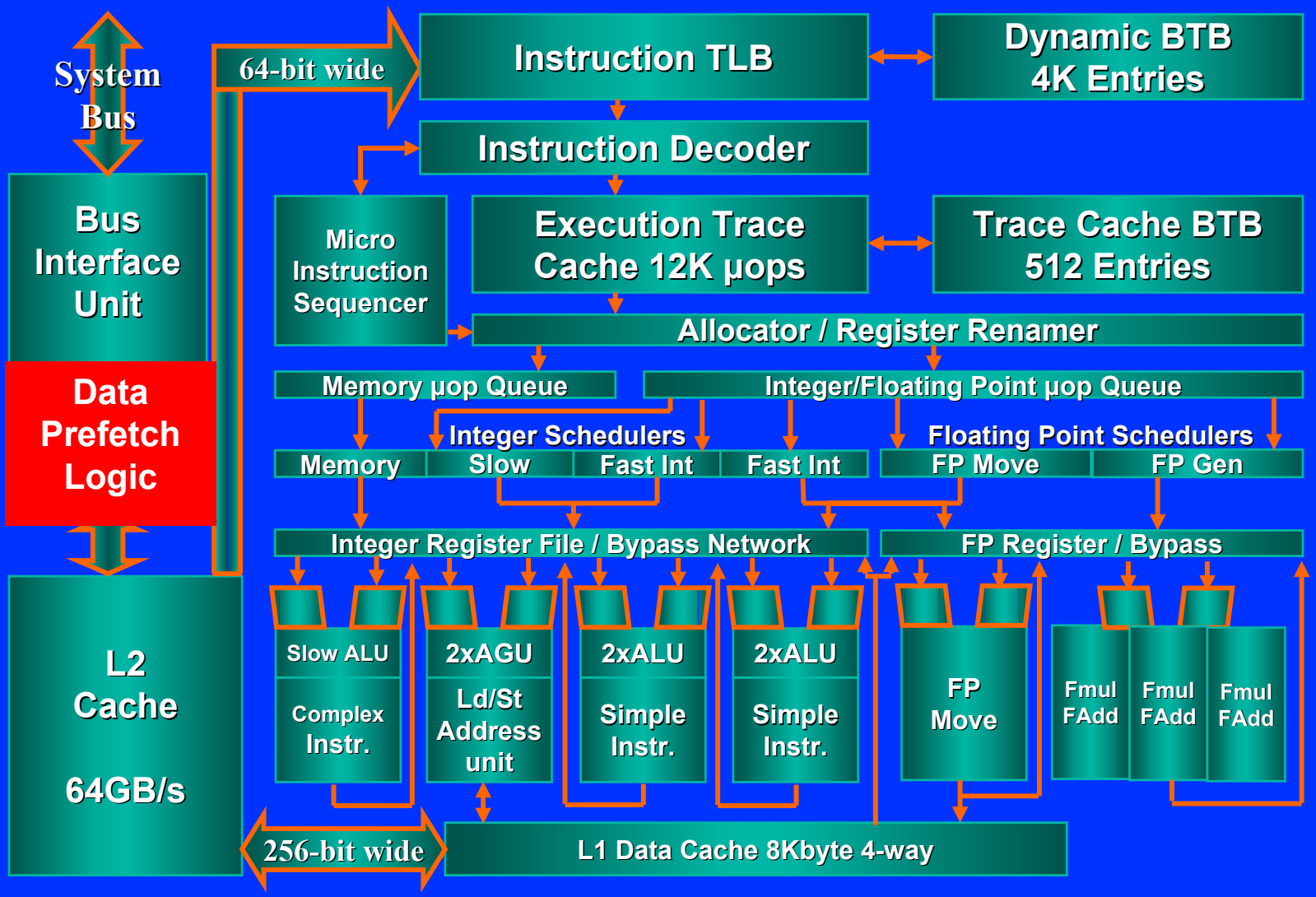

Copyright © 2001 Intel Corporation.

Data Prefetch Logic

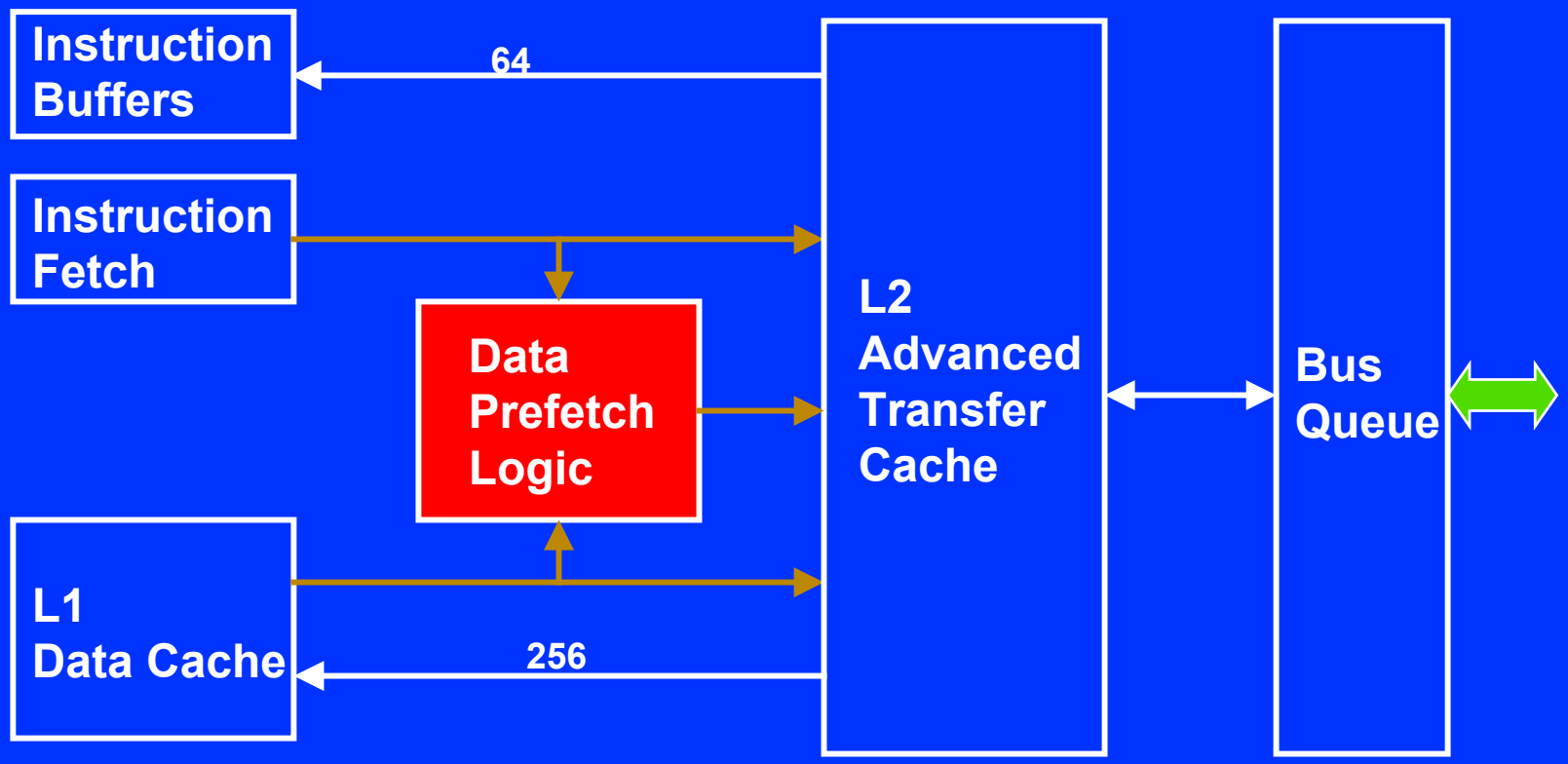

Prefetch logic first checks L2 cache and then fetches lines from memory that miss L2 cache.

Copyright © 2001 Intel Corporation.

Data Prefetch Logic

- Watches for streaming memory access patterns
  - Can track 8 multiple independent streams
  - Loads, Stores or Instruction
  - Forward or Backward
- Analysis on 32 byte cache line granularity
- Looks for “mostly” complete streams:
  - Access to cache lines 1,2,3,4,5,6 will prefetch
  - Access to cache lines 1,2, 4,5,6 will prefetch
  - 1, ,3, , ,6, , ,9 will not prefetch

Copyright © 2001 Intel Corporation.

Performance

- High bandwidth front end
- Low latency core
- Lower memory latency

Copyright © 2001 Intel Corporation.

Summary

- The Pentium® 4 Processor's deep pipelines provide high performance by enabling high frequency
- Deep pipelines are more difficult to engineer
- Larger caches further improve benefits of Pentium® 4 Processor's deep pipeline
- Compilers further increase benefits of deep pipelines by removing hazards

Copyright © 2001 Intel Corporation.

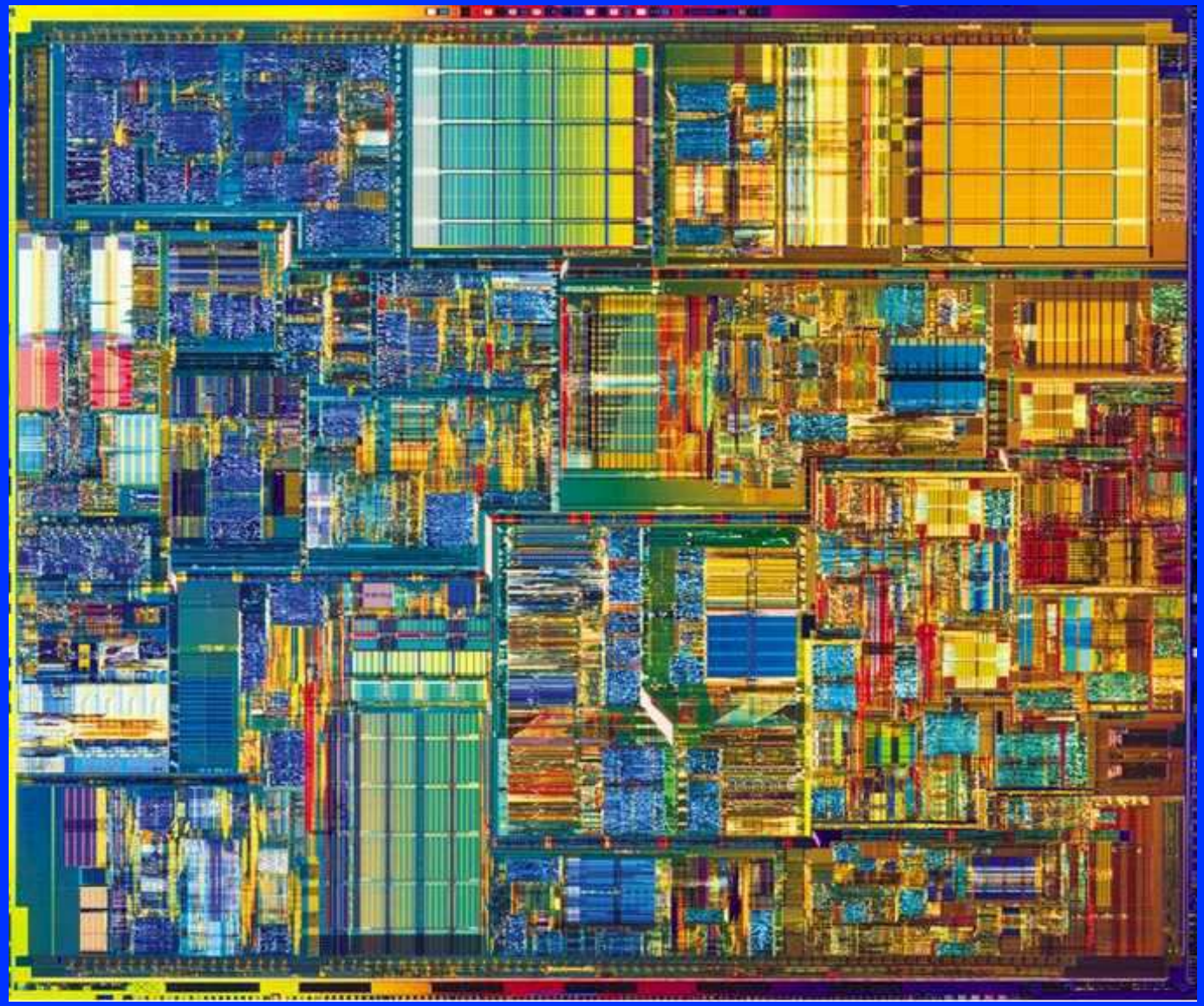

Copyright © 2001 Intel Corporation.